# EMERGENCY SHOWERS AND EYE WASH

## EMERGENCY SHOWER AND EYEWASH

**Safety shower and eyewash give an immediate deluge of water that would dilute and wash away injurious materials, such as corrosive chemical, fire, hot water, radiaoactive material.**

**The Emergency Shower was SIRIM approved and certified under ANSI/ISEA Z 358.1 : 2014 – American National Standard for Emergency Eyewash and Shower Equipment. Entire Emergency Shower was made from S304 Stainless Steel and operated by S316 Stainless Steel Ball Valve.**

**SIRIM APPROVED • STAINLESS STEEL**

**Emergency shower & Eyewash are essential to wash off on the spot contamination from accidents. In some jobs or work areas, the hazard may only happening limited to the worker's face and eyes. In this situation, an eyewash station is a device functioned as worker protection. Occasionally the worker may risk part or full body contact with a chemical. Emergency showers and eyewash stations provide on-the-spot decontamination which allows workers to flush away risky substances that can cause injury.**

**The need of emergency showers and eyewash is based on the chemicals that workers use and the tasks they do in the workplace. KL Lab Supplies provides emergency shower and eyewash with set, or separate by emergency shower or eyewash only. Clients may choose our emergency shower and eyewash set either with or without paddle.**

**The combination unit of emergency shower and eyewash has the ability to flush any part of the body or entire body. It is the most protective device and useful in situations where a worker who were in extreme pain or shock from an injury which may not be able to follow directions. The first 10 to 15 seconds after exposure to hazardous substance is critical, any delay in treatment may cause serious injury. Emergency showers can also be used to extinguishing clothing fires or for flushing contaminants off clothing.**

**It is important to know that emergency showers are designed to flush the user's head and body but not used to flush the user's eyes because the water flow could damage the eyes in some instances. Eyewash stations are designed to flush the eye and face area only when emergency happened.**

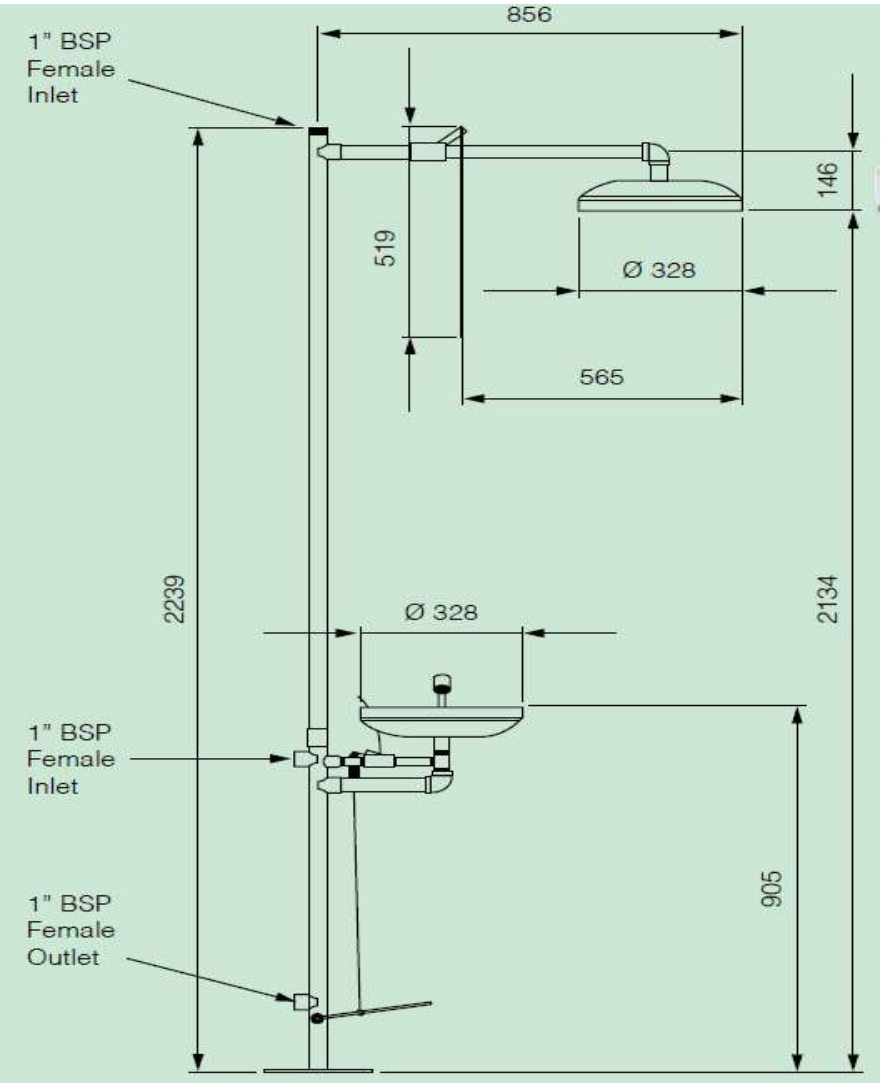

## Shower

### Head

328mm stainless steel head S304.

### Activation

Rigid stainless steel pull rod operates a stay open stainless steel S316 ball valve.

### Standard

Stainless steel S304 Pipe with green and white strip for high visibility and easily spotted in emergency situations.

## Eyewash

### Bowl

328mm stainless steel bowl S304 with reinforce rib.

### Eyewash Sprayhead Assembly

Stainless steel S304 with PP sprayhead assembly with soft flow eyewash head and dust cover. Sprayhead have built in filter to prevent perticles from the water that may cost damage to the user eyes.

### Activation

Stainless steel push plate and foot pedal operates a stay open stainless steel S316 ball valve.

### Sign

Universal emergency sign included.

# SPECIFICATIONS

| | |
|---|---|
| Head / Bowl Size (mm) | 328 mm |
| Head / Bowl Material | Stainless Steel S304 & operated by S316 Stainless Steel Ball Valve |
| Shower Spray Diameter | 200 mm comply to ANSI/ISEA Z 358.1 : 2014 & approved by SIRIM |
| Shower Flow Rate | 75.70 litres/min (20 gpm) at 30 psi |
| Eyewash Flow Rate | 1.50 litres/min (0.4 gpm) |
| Flowing Water Pressure | No less than 2 bar (30 psi) or more than 6 bar (90 psi). Capable of withstanding a maximum pressure of 10 bar when the valve is closed |

**328mm Stainless Steel Emergency Shower Head in operation deliver 75.70 litres/min (20 gpm) at 30 psi**

**Eyewash with two soft-flow streams and stainless steel S304 bowl gives a large flow at aerated water**

**Shower head give a concerntrated flow of water in a drench colum with radius of 200mm comply to ANSI/ISEA Z 358.1 : 2014**

# COMBINATION OF SHOWER & EYEWASH

## SS001-000

**Stainless Steel Floor Mounted Combination Unit Of Drench Shower and Eyewash**

## SS001-001

**Stainless Steel Floor Mounted Combination Unit Of Drench Shower And Eyewash With Foot Pedal**

## SS003-000

**Stainless Steel Floor Mounted Combination Unit Of Drench Shower And Eyewash (Adjustable Shower Head Position)**

## SS003-001

**Stainless Steel Floor Mounted Combination Unit Of Drench Shower And Eyewash With Foot Pedal (Adjustable Shower Head Position)**

## SU001-101

**Fully SUS 316 Stainless Steel Floor Mounted Combination Unit Of Drench Shower And Eyewash With Foot Pedal**

# EMERGENCY SHOWER

## SS002-000
**Fully Stainless Steel Floor Mounted Drench Shower**

## SS075-000
**Fully Stainless Steel Wall Mounted Drench Shower With Wall Bracket**

## SS076-000
**Fully Stainless Steel Wall Mounted Drench Shower (Without Wall Bracket)**

## SS150-000
**Fully Stainless Steel Vertical Mounted Drench Shower**

# EMERGENCY EYEWASH

**SS050-000**
**Stainless Steel Floor Mounted Eyewash**

**SS050-001**
**Stainless Steel Floor Mounted Eyewash With Foot Pedal**

**SS100-000**
**Stainless Steel Wall Mounted Eyewash**

**SS125-000**
**Eye/Body Bench Mounted Hand Shower**

**SS225-000**
**Eye/Body Bench Mounted Hand Shower (Double Eyewash Head)**

# SHOWER CURTAIN TRACK WITH CURTAIN

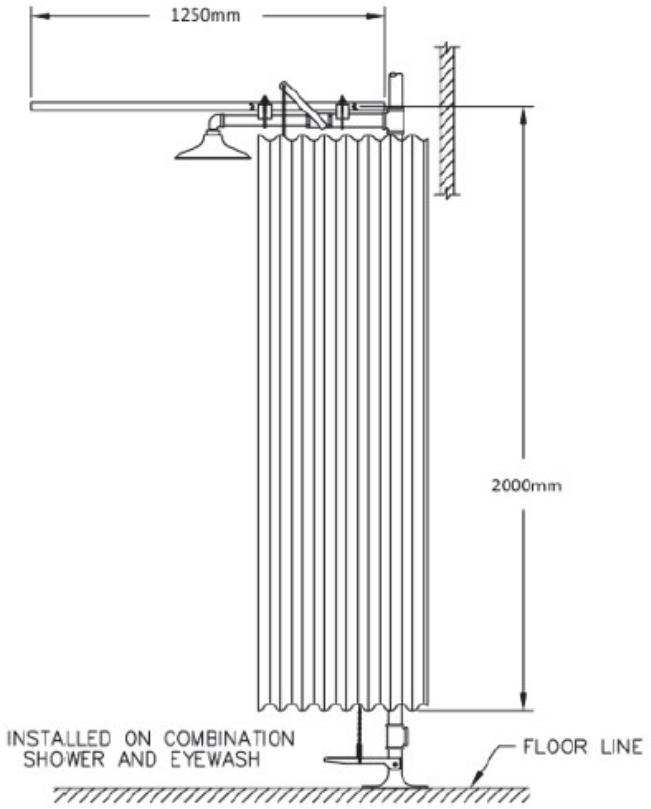

## SSA000-080

**Emergency Shower Curtain Track Complete With Shower Curtain**

## FEATURES

During an emergency that involves hazardous material, the injured is encouraged to disrobe to reduce the possibility of chemical burns, over exposure etc. In such situation, specifically where both sexes work cooperatively, we strongly recommend the use of a shower privacy curtain providing shower privacy for removal of contaminated clothing.

## BENEFITS

Emergency shower privacy curtain minimize the spray and the danger of equipment damage when using emergency shower.

Our easy-to-install emergency shower privacy curtain is made by durable 0.5 mm thickness Nylon material, it's waterproof and stand UV attack also a safe alternative to using PVC shower curtains that can give off many volatile organic compounds which can be toxic.

## APPLICATIONS

It is designed to be used on combination emergency drench shower and eyewash units. With a quick sweep of the hand on both sides, the curtain wraps around to enclose the shower and user

# SHOWER CABIN

## SS370-731-414

**Cabin Integrated Emergency Shower And Eyewash**

**Size : 1000mm (W) x 1150mm (D) x 2700mm (H)**

**Material : Stainless Steel S304**

**Come With : Air Curtains**

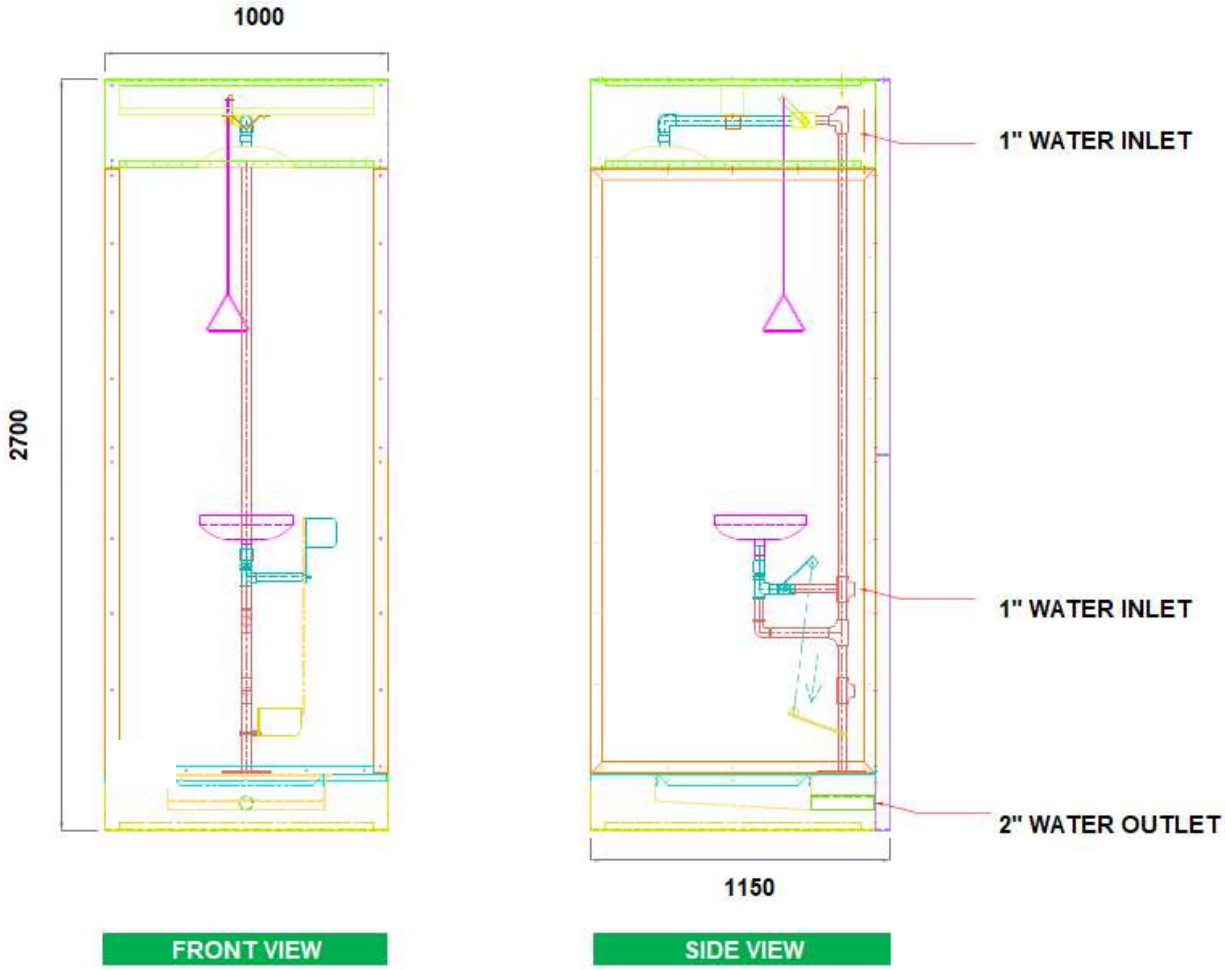

# SIRIM CERTIFICATE

No Lesen : **PC002727**
*Licence No :*

## LESEN PENSIJILAN BARANGAN
*Product Certification Licence*

SIRIM

**SIRIM QAS International Sdn. Bhd. dengan ini menganugerahkan kepada**
*SIRIM QAS International Sdn. Bhd. hereby grants to*

**KL LAB SUPPLIES SDN. BHD.**
**NO. 5, JALAN 36/41**
**OFF JALAN DATO M.SELLATHEVAN,**
**BATU 4, SEKSYEN 36**
**40470 SHAH ALAM**
**SELANGOR, MALAYSIA**

**Lesen untuk menggunakan Tanda Pensijilan di atas barangan**
*a licence to use the Certification Mark on*

**EMERGENCY EYEWASH AND SHOWER EQUIPMENT**

**Please refer to detail in the SCHEDULE**

**sebagai mematuhi keperluan**
*as complying with*

**ANSI/ISEA Z 358.1 : 2014**

**Ts. Md. Adha bin Katni @ Rahmat**
Ketua Pegawai Eksekutif
*Chief Executive Officer*
SIRIM QAS International Sdn. Bhd.

**SIRIM QAS International Sdn. Bhd.**
(No. Syarikat 199601037981(410334-X))

1, Persiaran Dato' Menteri
Seksyen 2, Peti Surat 7035
40700 Shah Alam
Selangor Darul Ehsan
MALAYSIA.

Tel : 603-5544 6000
Emel : cserviceqas@sirim.my

| | | | |
|---|---|---|---|
| **Tarikh Mula Pensijilan** | **: 13 January 2017** | **Tarikh Dikeluarkan** | **: 06 January 2026** |
| *Certified Since* | | *Issue Date* | |
| **Sah Sehingga** | **: 13 January 2027** | **No Siri** | : 121984 |
| *Valid Until* | | *Serial No* | |

Lesen ini dianugerahkan tertaluk kepada syarat-syarat Perjanjian Pensijilan Barangan SIRIM QAS International Sdn. Bhd.
*This Licence is granted subject to the provisions of the Product Certification Agreement of SIRIM QAS International Sdn. Bhd.*

**SS001-001**
Stainless Steel Floor Mounted Combination Unit Of Drench Shower And Eyewash With Foot Pedal.

**SS002-000**
Fully Stainless Steel Floor Mounted Drench Shower.

**SS050-001**
Stainless Steel Floor Mounted Eyewash With Bowl And Foot Pedal.

**SS075-000**
Fully Stainless Steel Wall Mounted Drench Shower With Wall Bracket.

**SS100-000**
Stainless Steel Wall Mounted Eyewash

**SS150-000**
Fully Stainless Steel Vertical Mount Drench Shower.